Single-Pole-Multi-Throw (SP7T-SP8T)

Normally Open - SMA - DC to 18 GHz

Features:

- Broadband: DC - 18 GHz
- Extended Life: 2 million cycles
- Excellent Repeatability
- Low Insertion Loss
- Available in 7 or 8 Positions

上海馥莱电子有限公司
021-5291 8556
sales@fulai-elec.com
www.fulai-elec.com

RF Specification:

Frequency, (GHz)	DC-6	6-12	12-18
Ins. Loss dB (max)	0.25	0.35	0.50
Isolation dB (min)	80	75	75
VSWR (max)	1.25:1	1.35:1	1.60:1
Switching Time	20 mS (max)		
Switching Action	Break-Before-Make		
Impedance	50Ω (Switch and Terminations)		

Description:

High reliability and low loss performance makes these switches ideal for all testing applications. Selected position remains active with constant voltage, all positions are open when voltage is removed. A wide selection of features available to meet most requirements. Good low to medium power handling. **Applications:** lab testing to production ATE requirements. **Markets:** defense, telecom, aerospace, enterprise, consumer and IoT.

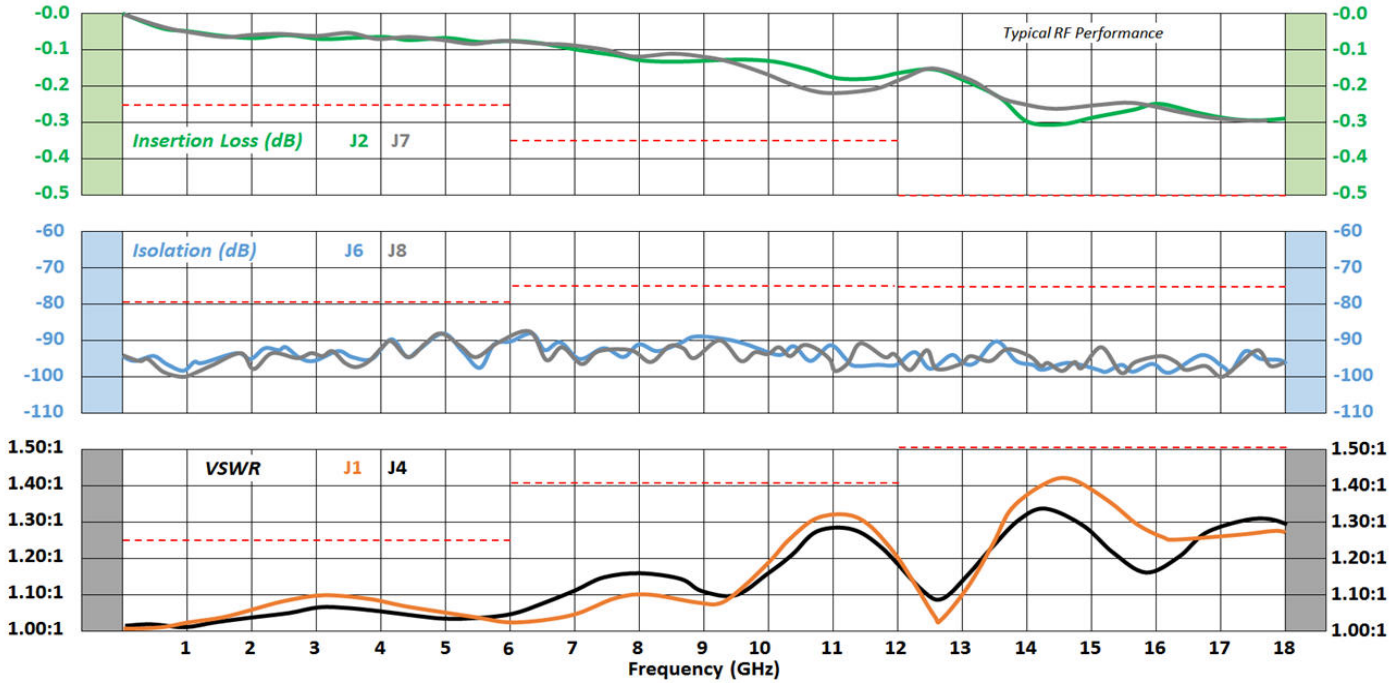

Specifications	
Oper Temp	-25° C to +65° C
Oper Temp	-54° C to +85° C (M version)
Storage Temp	-55° C to +100° C
Humidity	Moisture resistant or immersion sealing available
Shock	MIL-STD-202 Method 213, Condition D, 500G (non oper)
Vibration	MIL-STD-202 Method 214, Condition D, 10G RMS (non oper)
Cycle Life	5M cycles (may vary based on selected options)

Voltages and Current			
Nominal Voltage, Vdc	12	24	28
Voltage Range, Vdc	11-13	22-26	26-30
Set Current (mA)*	420	175	140

Popular Models	
SP7T-0E-18A	SP7T, SMA, Normally Open, DC-18GHz, 12VDC
SP7T-0E-18A-D	SP7T, SMA, Normally Open, DC-18GHz, 12VDC, TTL
SP8T-0E-18A	SP8T, SMA, Normally Open, DC-18GHz, 12VDC
SP8T-0E-18A-D	SP8T, SMA, Normally Open, DC-18GHz, 12VDC, TTL
SP8T-0F-18C	SP8T, SMA, Normally Open, DC-18GHz, 28VDC, Indicator

- See backside for a full list of available features and options
- Contact us for high power and custom designs

** at nominal voltage and +20°C*

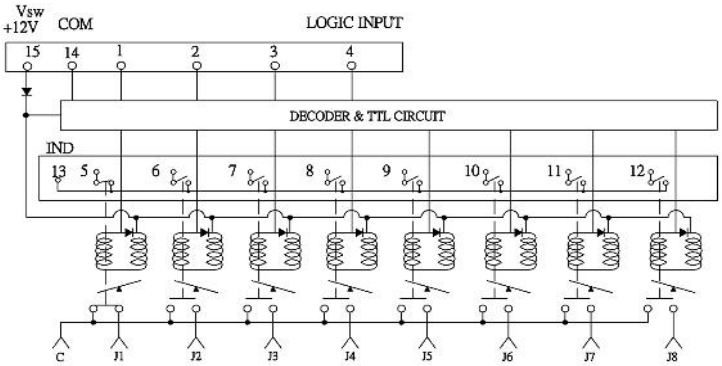

SP8T: Normally Open, Decoder, TTL, Indicators, 15 Pin D-Sub, (Position J1)

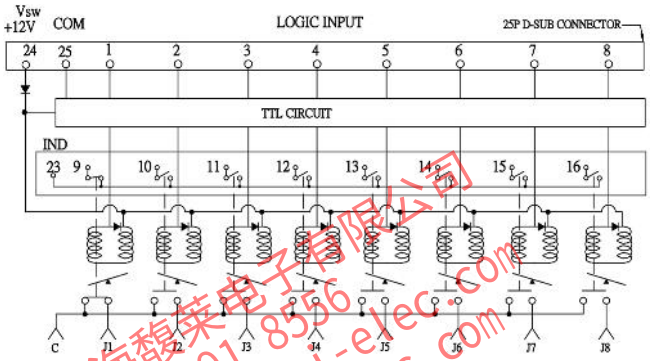

SP8T: Normally Open, TTL, Indicators, 25 pin D-Sub, (Position J1)

上海福莱电子有限公司
021-5291 8556
sales@fulai-elec.com
www.fulai-elec.com

Schematics

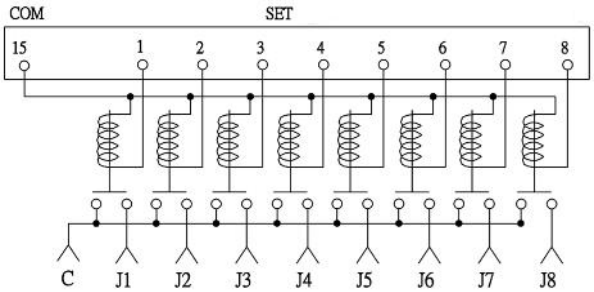

SP8T: Normally Open,
15 pin D-Sub,
(All Open Positions)

Outline

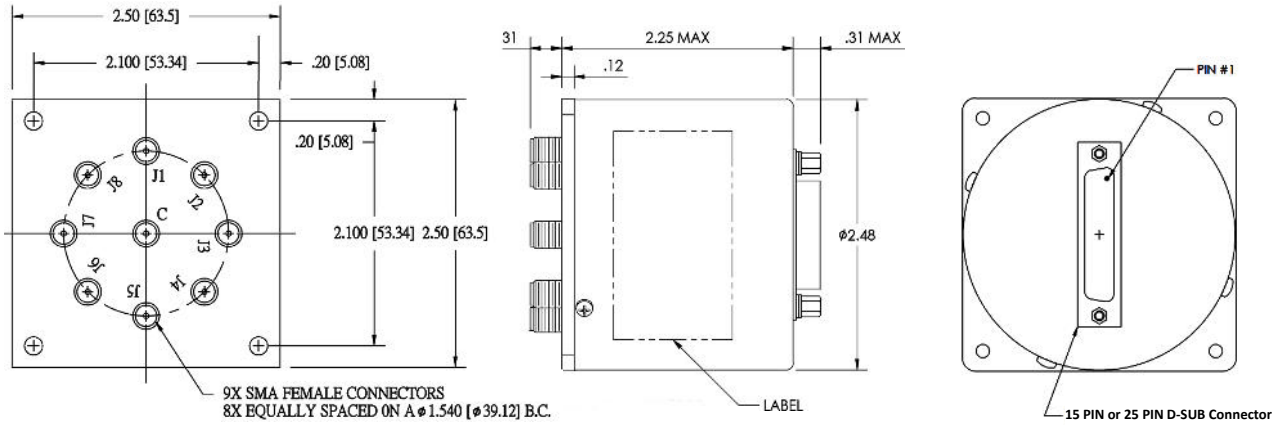

Model Numbering System

Example: SP8T-0E-18A-D

(SP8T, SMA Connector, Normally Open without indicator, DC-18GHz, 12VDC, TTL Driver, D-Sub Control)

S P 8 T - 0 E - 1 8 A - D - _

No. of Outputs

7 : SP7T
8 : SP8T

Control Options

Default : D-Sub Control
PIN : Pin Terminal Control

Connector Type

0: SMA	6: SMB
1: N	7: 7/16 DIN
2: TNC	8: BNC
3: RF PIN	9: K (2.92mm)
4: F (75Ω)	10: Mini DIN
5: SC	

Actuator Type

E : Normally Open without Indicator
F : Normally Open with Indicator

Frequency Range

03 : DC-3GHz
08 : DC-8GHz
12 : DC-12GHz
18 : DC-18GHz

Actuator Voltage

A : 12VDC	E : 20VDC
B : 15VDC	F : 5VDC
C : 28VDC	G: 18VDC
D : 24VDC	

Options

D : TTL Driver
E : Decoder
H : High Power
I : Suppression Diodes
P : Positive + Common
Y : Moisture Seal
C: Custom

RoHS Compliant

ISO 9001

* D-Sub connectors are standard for SPMT, no designation on model number needed

EPX microwave inc.

Single-Pole-Multi-Throw (SP7T-SP8T)

Normally Open - Terminations - SMA - DC to 18 GHz

Features:

- Broadband: DC - 18 GHz
- Extended Life: 2 million cycles
- Excellent Repeatability
- Low Insertion Loss
- 50Ω Internal Terminations
- Available in 7 or 8 Positions

上海馥莱电子有限公司
021-5291 8556
sales@fulai-elec.com
www.fulai-elec.com

RF Specification:

Frequency, (GHz)	DC-6	6-12	12-18
Ins. Loss dB (max)	0.25	0.35	0.50
Isolation dB (min)	80	75	75
VSWR (max)	1.25:1	1.35:1	1.60:1
Switching Time	20 mS (max)		
Switching Action	Break-Before-Make		
Impedance	50Ω (Switch and Terminations)		

Description:

Internal 50 ohm terminations ensure good isolation in the "off" state regardless of the match to which the switch is connected. High reliability and low loss performance makes these switches ideal for all testing applications. Selected position remains active with constant voltage, all positions are open when voltage is removed. **Applications:** lab testing to production ATE requirements. **Markets:** defense, telecom, aerospace, enterprise, consumer and IoT.

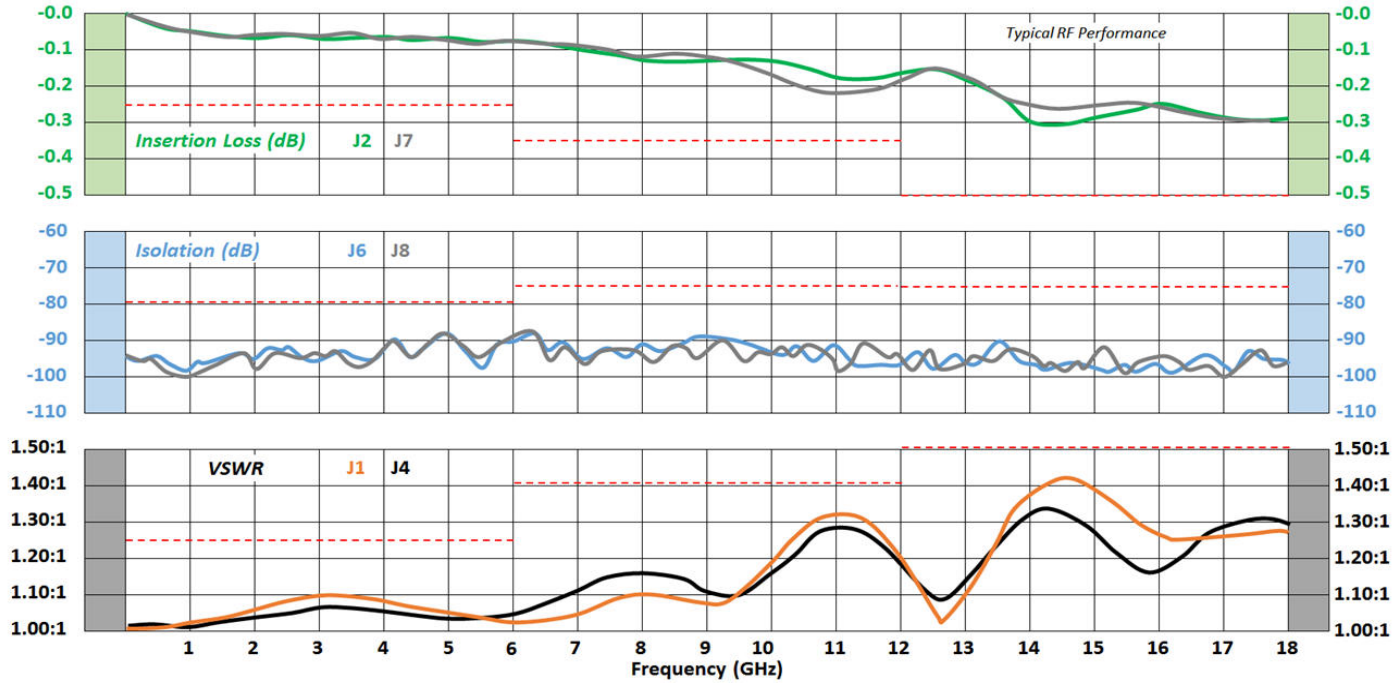

Specifications	
Oper Temp	-25° C to +65° C
Oper Temp	-54° C to +85° C (M version)
Storage Temp	-55° C to +100° C
Humidity	Moisture resistant or immersion sealing available
Shock	MIL-STD-202 Method 213, Condition D, 500G (non oper)
Vibration	MIL-STD-202 Method 214, Condition D, 10G RMS (non oper)
Cycle Life	2M cycles (may vary based on selected options)

Voltages and Current			
Nominal Voltage, Vdc	12	24	28
Voltage Range, Vdc	11-13	22-26	26-30
Set Current (mA)*	420	175	140

Popular Models	
SP7T-0E-18A-T	SP7T, SMA, Normally Open, DC-18GHz, 12VDC, Internal Termination
SP8T-0E-18A-T	SP8T, SMA, Normally Open, DC-18GHz, 12VDC, , Internal Termination
SP7T-0E-18A-TD	SP7T, SMA, Normally Open, DC-18GHz, 12VDC, Internal Termination, TTL
SP8T-0E-18A-TD	SP8T, SMA, Normally Open, DC-18GHz, 12VDC, Internal Termination , TTL

- See backside for a full list of available features and options
- Contact us for high power and custom designs

** at nominal voltage and +20°C*

ISO 9001

RoHS Compliant

Schematics

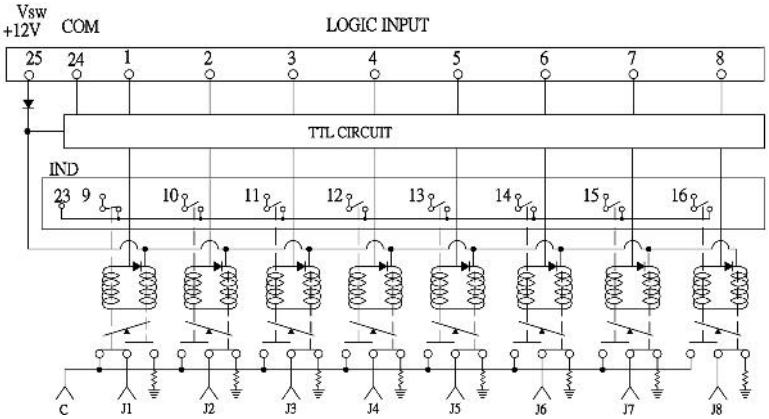

SP8T: Normally Open, 50Ω terminations, TTL control, Indicators, 25 Pin D-Sub

(Position J1)

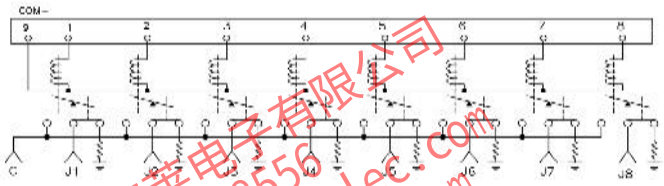

SP8T: 50Ω terminations, 15 pin D-Sub

(All Positions Open)

上海馥莱电子有限公司
021-5291 8556
sales@fulai-elec.com
www.fulai-elec.com

Outline

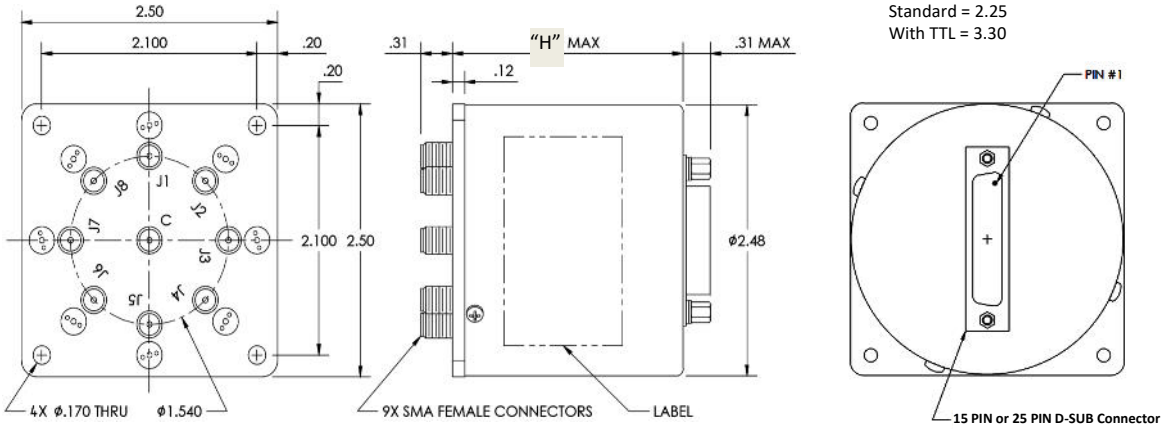

"H" DIM:
Standard = 2.25
With TTL = 3.30

Model Numbering System

Example: SP8T-0E-18A-T

(SP8T, SMA Connector, Normally Open without indicator, DC-18GHz, 12VDC, Internal Termination, D-Sub Control)

S P 8 T - 0 E - 1 8 A - T - __

No. of Outputs
7 : SP7T
8 : SP8T

Control Options
Default : D-Sub Control
PIN : Pin Terminal Control

Connector Type	
0: SMA	6: SMB
1: N	7: 7/16 DIN
2: TNC	8: BNC
3: RF PIN	9: K (2.92mm)
4: F (75Ω)	10: Mini DIN
5: SC	

Actuator Type
E : Normally Open without Indicator
F : Normally Open with Indicator

Frequency Range
03 : DC-3GHz
08 : DC-8GHz
12 : DC-12GHz
18 : DC-18GHz

Actuator Voltage	
A : 12VDC	E : 20VDC
B : 15VDC	F : 5VDC
C : 28VDC	G: 18VDC
D : 24VDC	

Options
D : TTL Driver
E : Decoder
I : Suppression Diodes
P : Positive + Common
T : Internal Termination
Y : Moisture Seal
C: Custom

RoHS Compliant

ISO 9001

* D-Sub connectors are standard for SPMT, no designation on model number needed

EPX microwave inc.

Single-Pole-Multi-Throw (SP7T-SP8T)

Latching - SMA - DC to 18 GHz

Features:

- Broadband: DC - 18 GHz
- Extended Life: 5 million cycles
- Excellent Repeatability
- Low Insertion Loss
- Available in 7 or 8 Positions

上海馥莱电子有限公司
021-5294 8556
sales@fulai-elec.com
www.fulai-elec.com

RF Specification:

Frequency, (GHz)	DC-6	6-12	12-18
Ins. Loss dB (max)	0.25	0.35	0.50
Isolation dB (min)	80	75	75
VSWR (max)	1.25:1	1.35:1	1.60:1
Switching Time	20 mS (max)		
Switching Action	Break-Before-Make		
Impedance	50Ω (Switch and Terminations)		

Description:

High reliability and low loss performance makes these switches ideal for all testing applications. Magnetically latched in place after control voltage is removed. Available in 7 or 8 position versions with a wide selection of features available to meet most requirements. Good low to medium power handling. **Applications:** lab testing to production ATE requirements. **Markets:** defense, telecom, aerospace, enterprise, consumer and IoT.

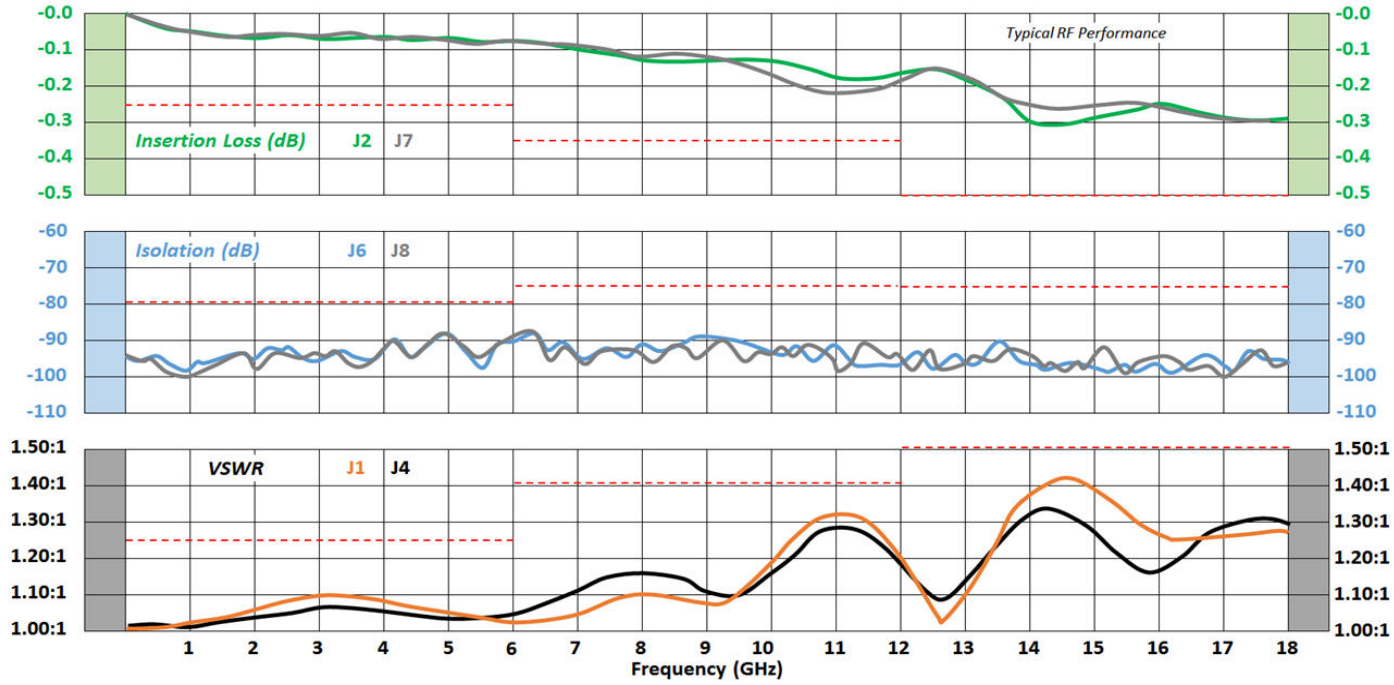

Specifications	
Oper Temp	-25° C to +65° C
Oper Temp	-54° C to +85° C (M version)
Storage Temp	-55° C to +100° C
Humidity	Moisture resistant or immersion sealing available
Shock	MIL-STD-202 Method 213, Condition D, 500G (non oper)
Vibration	MIL-STD-202 Method 214, Condition D, 10G RMS (non oper)
Cycle Life	5M cycles (may vary based on selected options)

Voltages and Current			
Nominal Voltage, Vdc	12	24	28
Voltage Range, Vdc	11-13	22-26	26-30
Set Current (mA)*	110	125	105
Reset Current (mA) * (SP8T)	880	1000	840

Popular Models	
SP7T-0C-18A	SP7T, SMA, Latching, DC-18GHz, 12VDC
SP7T-0C-18A-D	SP7T, SMA, Latching, DC-18GHz, 12VDC, TTL
SP8T-0C-18A	SP8T, SMA, Latching, DC-18GHz, 12VDC
SP8T-0C-18A-D	SP8T, SMA, Latching, DC-18GHz, 12VDC, TTL
SP8T-0D-18C	SP8T, SMA, Latching, DC-18GHz, 28VDC, Indicator

- See backside for a full list of available features and options
- Contact us for high power and custom designs

** at nominal voltage and +20°C*

ISO 9001

RoHS Compliant

Schematics

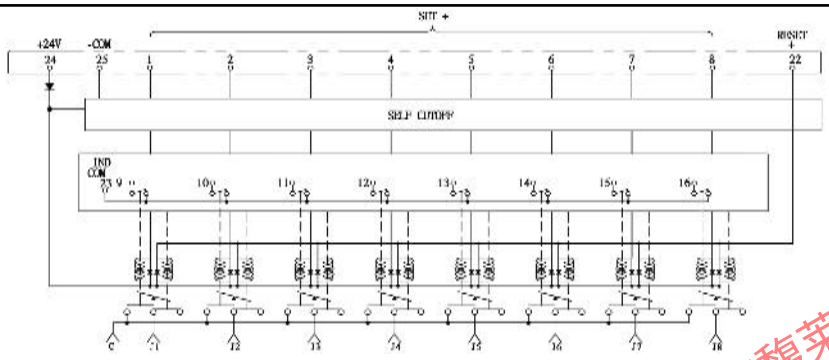

SP8T: Latching, Self Cutoff, Indicators, 25 Pin D-Sub (Reset Position)

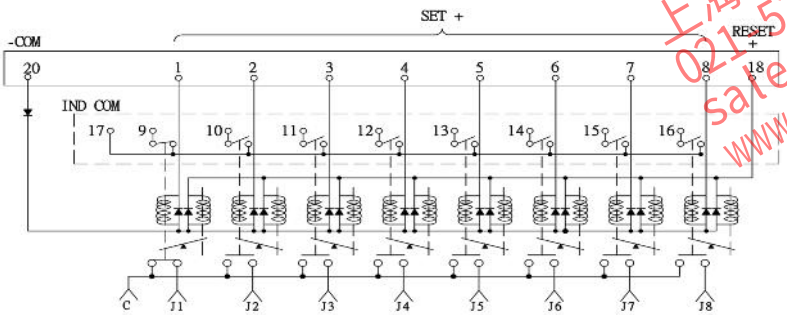

SP8T: 50Ω terminations, 15 pin D-Sub, (Position J1)

TTL Control

Logic "1": 2.4 to 5.0 VDC

Logic "0": 0 to 0.8 VDC

Actuation Control

Requires two sequential pulses

"Reset and Set" (see below)

T1 & T2 = 30mS min.

T3 = 10mS min.

T4 & T5 = 20mS max

Contact factory for full operating sequence, pin assignments and truth tables

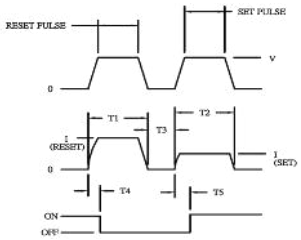

上海馥莱电子有限公司
021 5291 8556
sales@fulai-elec.com
www.fulai-elec.com

Outline

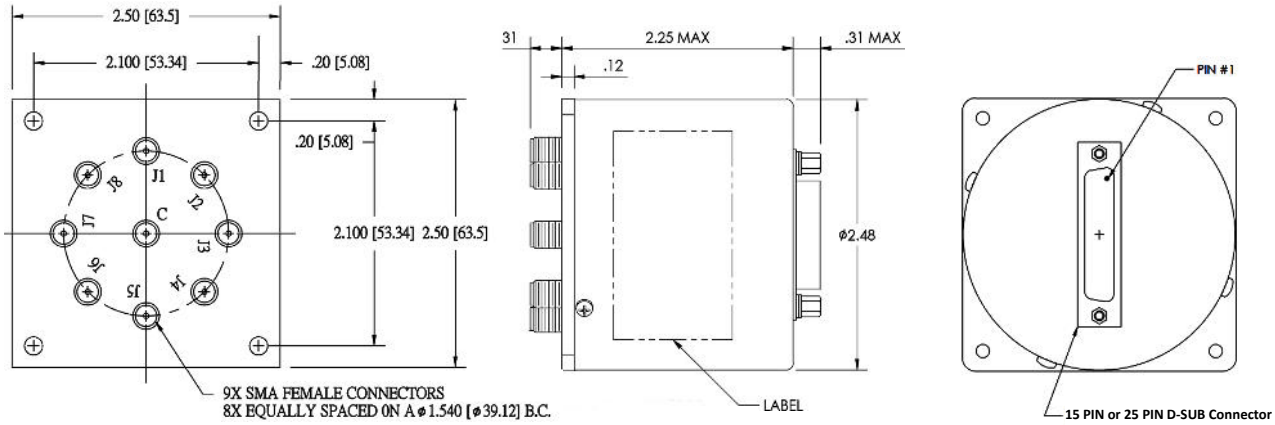

Model Numbering System

Example: SP8T-0C-18A-D

(SP8T, SMA Connector, Latching without indicator, DC-18GHz, 12VDC, TTL Driver, D-Sub Control)

S P 8 T - 0 C - 1 8 A - D - _

No. of Outputs

7 : SP7T
8 : SP8T

Connector Type

0: SMA	6: SMB
1: N	7: 7/16 DIN
2: TNC	8: BNC
3: RF PIN	9: K (2.92mm)
4: F (75Ω)	10: Mini DIN
5: SC	

Actuator Type

C : Latching without Indicator
D : Latching with Indicator

Frequency Range

03 : DC-3GHz
08 : DC-8GHz
12 : DC-12GHz
18 : DC-18GHz

Actuator Voltage

A : 12VDC	E : 20VDC
B : 15VDC	F : 5VDC
C : 28VDC	G: 18VDC
D : 24VDC	

Options

D : TTL Driver
E : Decoder
H : High Power
I : Suppression Diodes
P : Positive + Common
S : Self Cutoff
Y : Moisture Seal
C: Custom

Control Options

Default : D-Sub Control
PIN : Pin Terminal Control

RoHS Compliant

ISO 9001

* D-Sub connectors are standard for SPMT, no designation on model number needed

Single-Pole-Multi-Throw (SP7T-SP8T)

Latching - Terminations - SMA - DC to 18 GHz

Features:

- Broadband: DC - 18 GHz
- Extended Life: 5 million cycles
- Excellent Repeatability
- Low Insertion Loss
- 50Ω Internal Terminations
- Available in 7 or 8 Positions

上海馥莱电子有限公司
021-5291 8556
sales@ulai-elec.com
www.ulai-elec.com

RF Specification:

Frequency, (GHz)	DC-6	6-12	12-18
Ins. Loss dB (max)	0.25	0.35	0.50
Isolation dB (min)	80	75	75
VSWR (max)	1.25:1	1.35:1	1.60:1
Switching Time	20 mS (max)		
Switching Action	Break-Before-Make		
Impedance	50Ω (Switch and Terminations)		

Description:

Internal 50 ohm terminations ensure good isolation in the "off" state regardless of the match to which the switch is connected. High reliability and low loss performance makes these switches ideal for all testing applications. Magnetically latched in place after control voltage is removed. **Applications:** lab testing and production ATE requirements. **Markets:** defense, telecom, aerospace, enterprise, consumer and IoT.

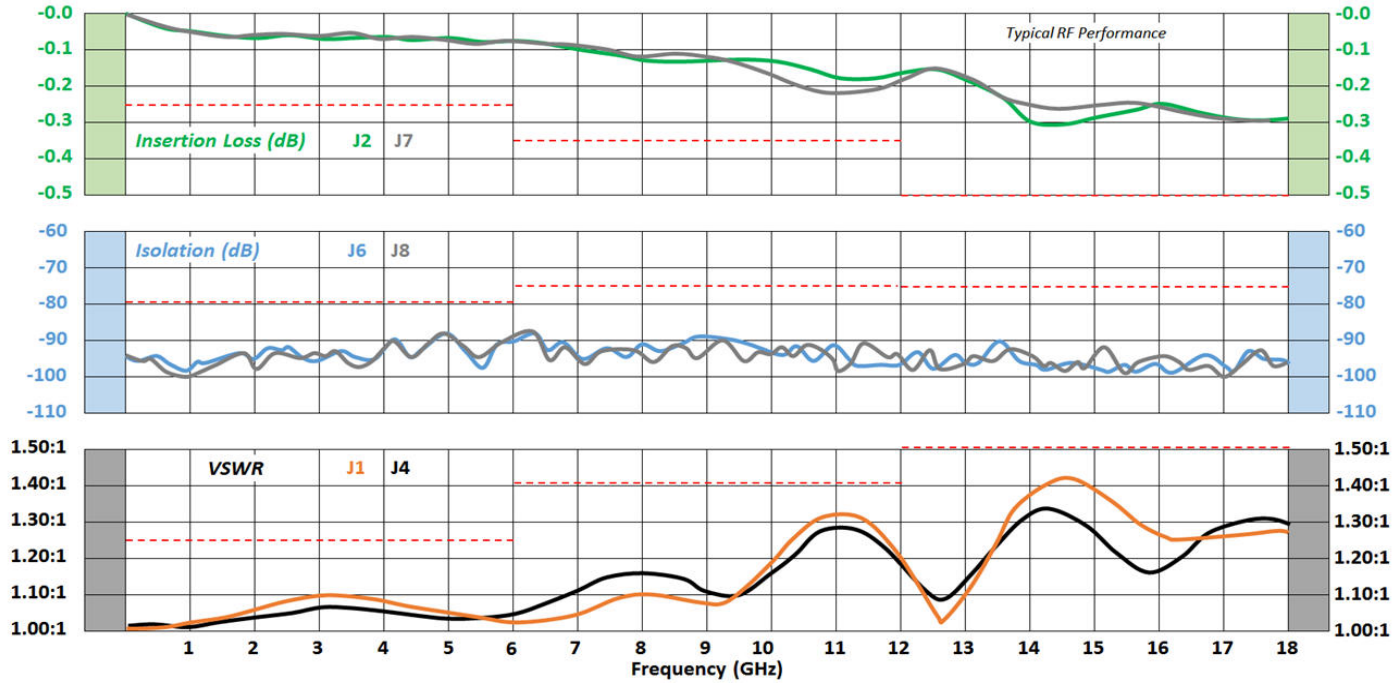

Specifications	
Oper Temp	-25° C to +65° C
Oper Temp	-54° C to +85° C (M version)
Storage Temp	-55° C to +100° C
Humidity	Moisture resistant or immersion sealing available
Shock	MIL-STD-202 Method 213, Condition D, 500G (non oper)
Vibration	MIL-STD-202 Method 214, Condition D, 10G RMS (non oper)
Cycle Life	5M cycles (may vary based on selected options)

Voltages and Current			
Nominal Voltage, Vdc	12	24	28
Voltage Range, Vdc	11-13	22-26	26-30
Set Current (mA)*	110	125	105
Reset Current (mA) * (SP8T)	880	1000	840

Popular Models	
SP7T-0C-18A-T	SP7T, SMA, Latching, DC-18GHz, 12VDC, Internal Termination
SP8T-0C-18A-T	SP8T, SMA, Latching, DC-18GHz, 12VDC, , Internal Termination
SP8T-0C-18A-TD	SP8T, SMA, Latching, DC-18GHz, 12VDC, Internal Termination, TTL
SP8T-0D-18A-T	SP8T, SMA, Latching, DC-18GHz, 12VDC, Internal Termination , Indicator

- See backside for a full list of available features and options
- Contact us for high power and custom designs

** at nominal voltage and +20°C*

Single-Pole-Multi-Throw (SP7T-SP8T)

Latching - Terminations - SMA - DC to 18 GHz

Schematics

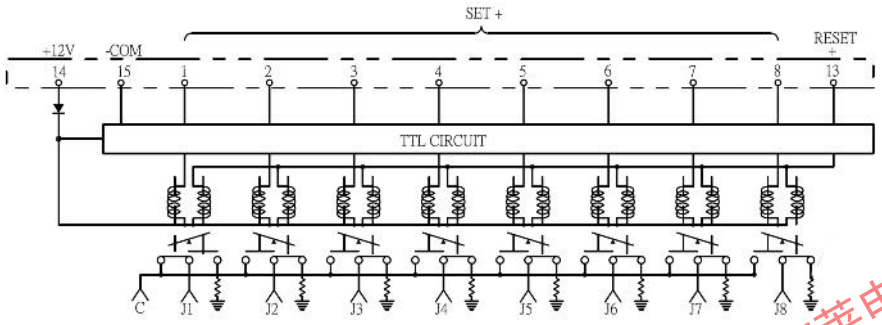

SP8T: Latching, 50Ω terminations, TTL, 15 Pin D-Sub, (Position J1)

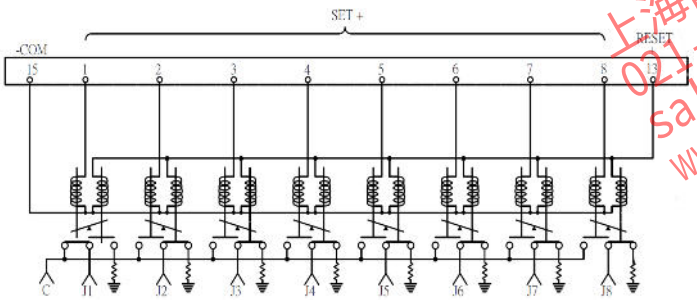

SP8T: 50Ω terminations, 15 pin D-Sub, (Position J1)

TTL Control

Logic "1": 2.4 to 5.0 VDC
Logic "0": 0 to 0.8 VDC

Actuation Control

Requires two sequential pulses
"Reset and Set" (see below)
T1 & T2 = 30mS min.
T3 = 10mS min.
T4 & T5 = 20mS max
Contact factory for full operating sequence, pin assignments and truth tables

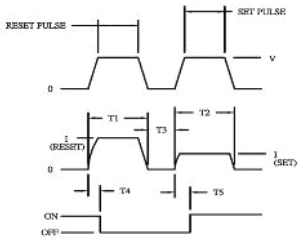

上海馥莱电子有限公司
021-5291 8556
sales@fulai-elec.com
www.fulai-elec.com

Outline

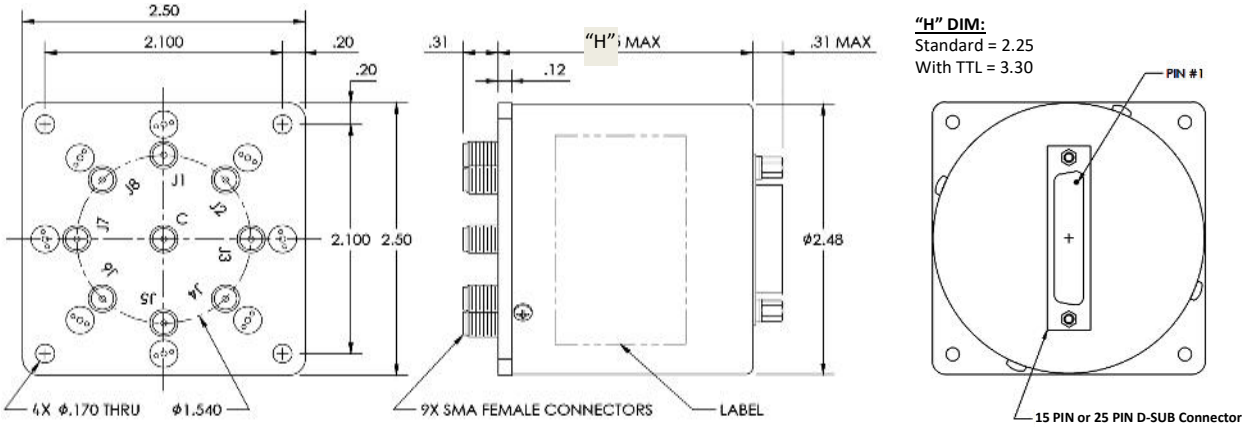

"H" DIM:
Standard = 2.25
With TTL = 3.30

Model Numbering System

Example: SP8T-0C-18A-T

(SP8T, SMA Connector, Latching without indicator, DC-18GHz, 12VDC, Internal Termination, D-Sub Control)

S P 8 T - 0 C - 1 8 A - T - __

No. of Outputs

7 : SP7T
8 : SP8T

Connector Type

0: SMA	6: SMB
1: N	7: 7/16 DIN
2: TNC	8: BNC
3: RF PIN	9: K (2.92mm)
4: F (75Ω)	10: Mini DIN
5: SC	

Actuator Type

C : Latching without Indicator
D : Latching with Indicator

Frequency Range

03 : DC-3GHz
08 : DC-8GHz
12 : DC-12GHz
18 : DC-18GHz

Actuator Voltage

A : 12VDC	E : 20VDC
B : 15VDC	F : 5VDC
C : 28VDC	G: 18VDC
D : 24VDC	

Options

D : TTL Driver
E : Decoder
I : Suppression Diodes
P : Positive + Common
S : Self Cutoff
T : Internal Termination
Y : Moisture Seal
C: Custom

Control Options

Default : D-Sub Control
PIN : Pin Terminal Control

RoHS Compliant

ISO 9001

* D-Sub connectors are standard for SPMT, no designation on model number needed

Disclaimer: Subject to change without notice @2016